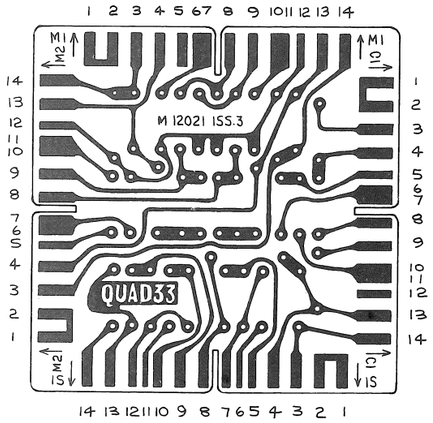

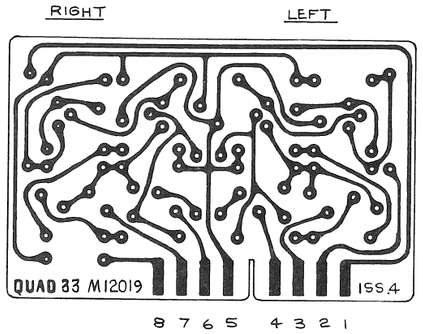

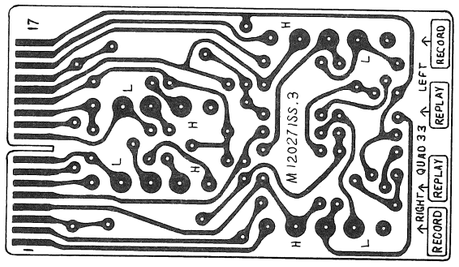

RIGHTHAND AMPLIFIER IS TO THE REAR OF UNIT

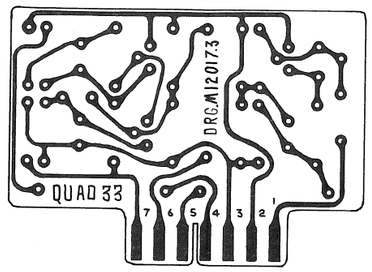

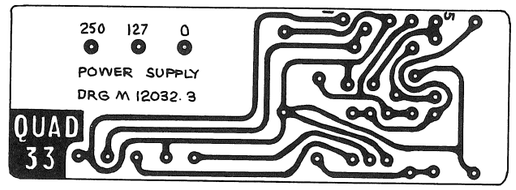

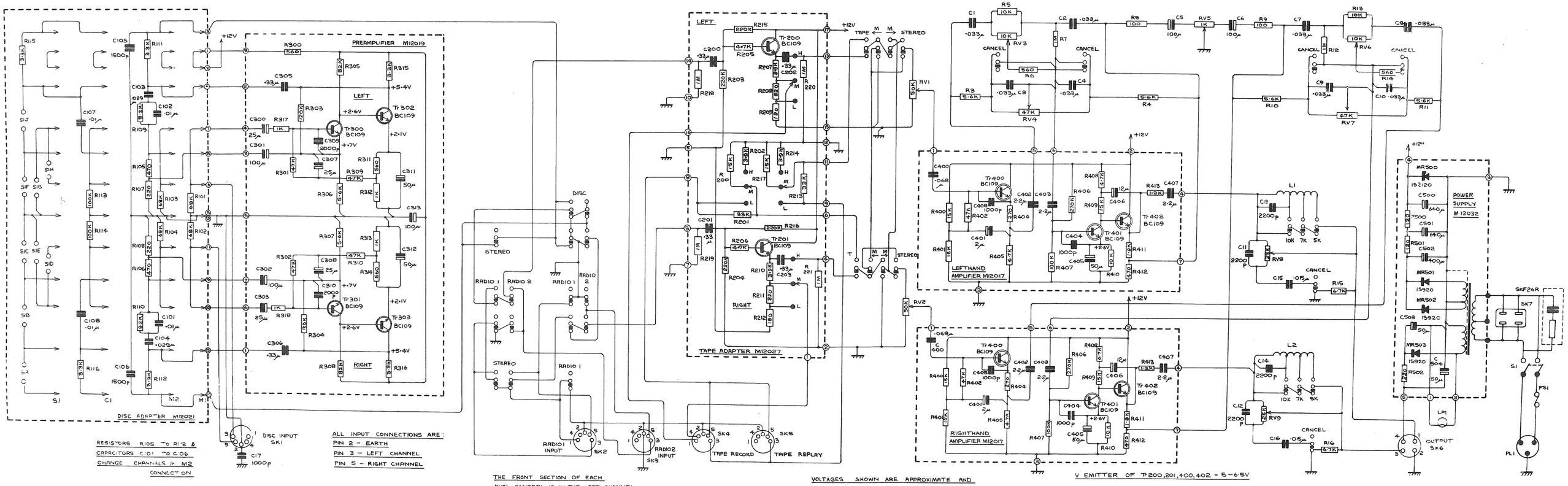

RESISTORS R105 TO R112 & CAPACITORS C101 TO C106 CHANGE CHANNELS IN M2 CONNECTION

ALL INPUT CONNECTIONS ARE:
PIN 2 – EARTH
PIN 3 – LEFT CHANNEL
PIN 5 – RIGHT CHANNEL

THE FRONT SECTION OF EACH DUAL CONTROL IS IN THE LEFT CHANNEL

VOLTAGES SHOWN ARE APPROXIMATE AND ALLOWANCE SHOULD BE MADE FOR LOADING EFFECTS OF A VOLTMETER

V EMITTER OF TR200, 201, 400, 402 = 5–6·5V

QUAD 33 (ABOVE SERIAL No 11500)